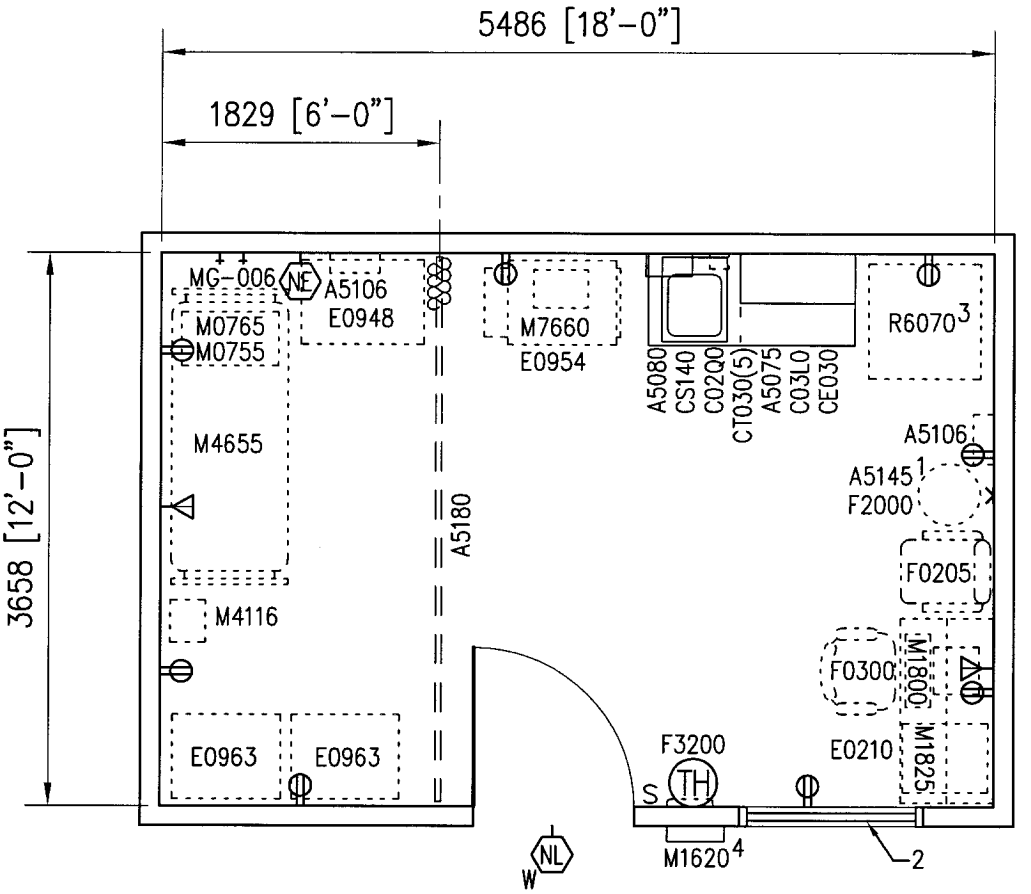

KEY NOTES

1. MOUNT A5145, HOOK, AT 1372 [4'-6"] AFF. PROVIDE 2-A5145'S FOR NAVY PROJECTS ONLY. MOUNT 1-A5145 AT 1372 [4'-6"] AFF AND 1-A5145 AT 1524 [5'-0"] AFF.
2. OBSERVATION WINDOW WITH VIEW OF POST IMMUNIZATION WAITING AND INTEGRAL BLINDS. WIDTH MAY VARY.
3. R6070, REFRIGERATOR/FREEZER, SHALL BE CONNECTED TO AN ALARM SYSTEM IF ONE IS PROVIDED IN THE FACILITY. PROVIDE EMERGENCY POWER FOR HOSPITALS ONLY.
4. PROVIDE M1620, PATIENT CHART HOLDER, FOR ARMY AND NAVY PROJECTS ONLY. COORDINATE LOCATION OF M1620, PATIENT CHART HOLDER, AND ROOM SIGNAGE.

OUTPATIENT IMMUNIZATION (OPIR1) 3.17.01

ALLERGY/IMMUNIZATION

FLOOR/EQUIPMENT PLAN 20.07 NSM (216 NSF)

DATE: 01/28/2002

0 1000 2000

1:50 SCALE (MILLIMETERS)

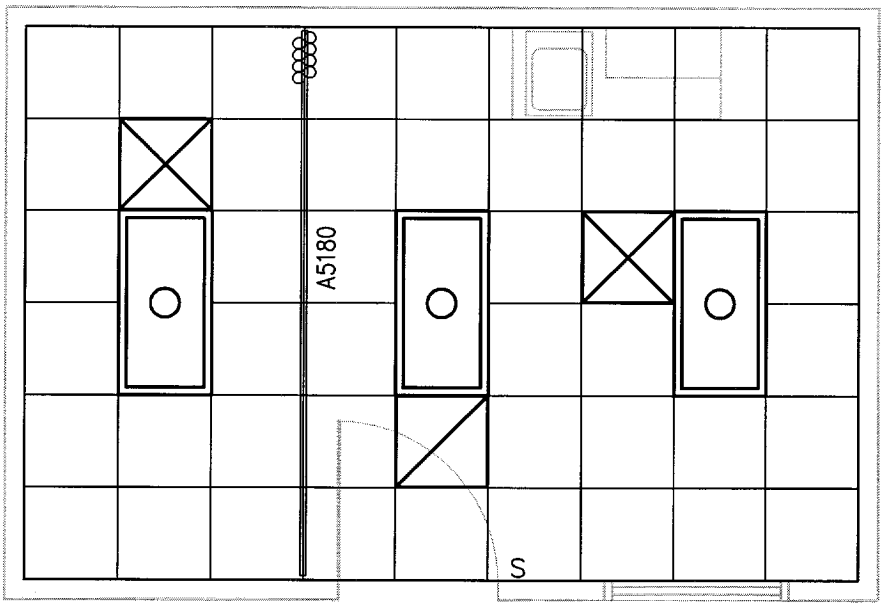

OUTPATIENT IMMUNIZATION (OPIR1) 3.17.01

ALLERGY/IMMUNIZATION

CEILING PLAN

DATE: 01/28/2002

0 1000 2000

1:50 SCALE (MILLIMETERS)

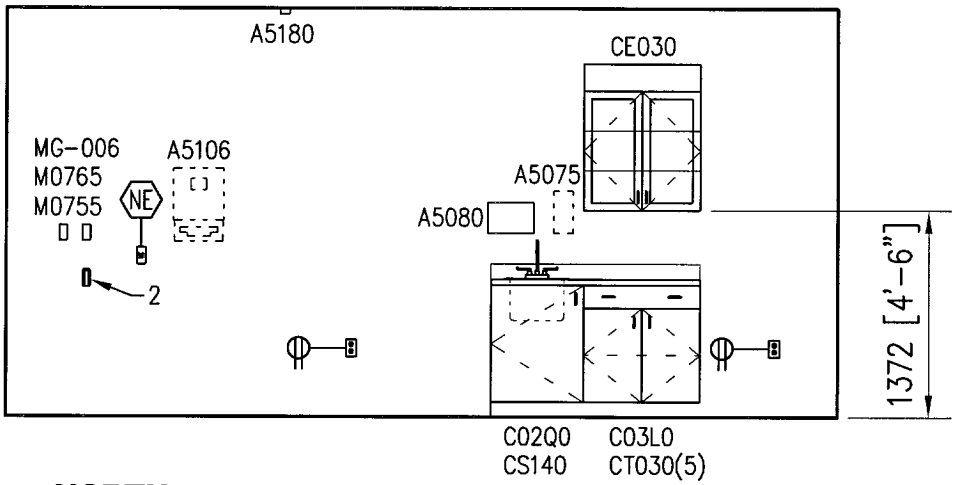

NORTH

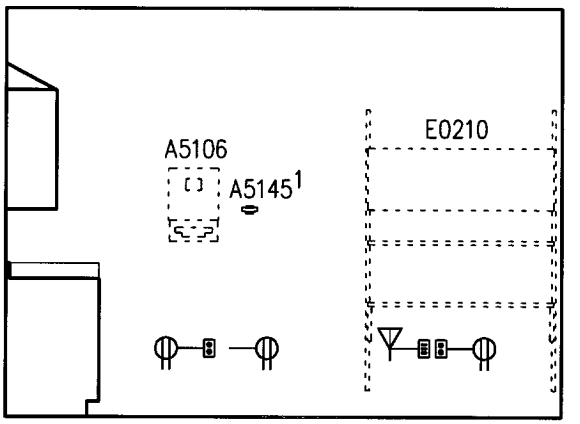

EAST

NOTES
1. SEE TYPICAL EQUIPMENT MOUNTING HEIGHTS BEGINNING ON SHEET 7.01.01.

KEY NOTES
1. MOUNT A5145, HOOK, AT 1372 [4'-6"] AFF. PROVIDE 2-A5145'S FOR NAVY PROJECTS ONLY. MOUNT 1-A5145 AT 1372 [4'-6"] AFF AND 1-A5145 AT 1524 [5'-0"] AFF.
2. VACUUM SLIDE.

OUTPATIENT IMMUNIZATION (OPIR1) 3.17.01

ALLERGY/IMMUNIZATION

FLOOR/EQUIPMENT PLAN

DATE: 01/28/2002

0 1000 2000

1:50 SCALE (MILLIMETERS)

Medical Equipment Room Guide Plates

3.17 Allergy/Immunization

Plate Number 3.17.01
Room Name OUTPATIENT IMMUNIZATION
SEPS # OPIR1

JSN	Nomenclature	Qty	Army Cat	Navy Cat	AF Cat	Utilities 1	2	3	4	5	6
A5075	Dispenser, Soap, Disposable	1	C	C	C	.	.	.	.	.	.
A5080	Dispenser, Paper Towel, SS, Surface Mounted	1	A	A	A	.	.	.	.	.	J
A5106	Waste Disposal Unit, Sharps w/Glove Dispenser	2	C	A	C	.	.	.	.	.	.
A5145	Hook, Garment, Double, SS, Surface Mounted	1	A	A	A	.	.	.	.	.	J
A5180	Track, Cubicle, Surface Mounted, With Curtain	1	A	A	A	.	.	.	.	.	J
C02Q0	Cabinet, Sink, U/C/B, 1 Door, 36x24x22	1	A	A	A	.	.	.	.	.	.
C03L0	Cabinet, U/C/B, 1 DR, 3 Half DR, 1 Door, 36x30x22	1	A	A	A	.	.	.	.	.	.
CE030	Cabinet, W/H, 2 SH, 2 GDO, Sloping Top, 38x30x13	1	A	A	A	.	.	.	.	.	J
CS140	Sink, SS, Single Compartment, 10x14x16 ID	1	A	A	A	D	.	.	.	.	.
CT030	Countertop, High Pressure Laminate	5	A	A	A	.	.	.	.	.	.
E0210	Worksurface, w/Overhead Cab, Wall Mtd, 48" W	1	C	C	C	.	A	.	.	.	J
E0948	Cart, General Storage, Mobile, 42"H x 32"W x 22"D	1	C	C	C	.	.	.	.	.	.
E0954	Cart, Emergency, Mobile, 66"H x 52"W x 22"D	1	C	C	C	.	.	.	.	.	.
E0963	Cart, General Storage, Mobile, 72"H x 23"W x 22"D	2	C	C	C	.	.	.	.	.	.
F0205	Chair, Side With Arms	1	C	C	C	.	.	.	.	.	.
F0300	Chair, Typist, Swivel	1	C	C	C	.	.	.	.	.	.
F2000	Basket, Wastepaper, Round, Metal, 18 H x 16 Dia.	1	C	C	C	.	.	.	.	.	.
F3200	Clock, Battery, 12" Diameter	1	C	C	C	.	.	.	.	.	.
M0755	Flowmeter, Oxygen, Low Flow	1	C	C	C	.	.	A	.	.	.
M0765	Regulator, Vacuum	1	C	C	C	.	.	B	.	.	.
M1620	Holder, Chart, Patient, Wall or Door Mounted	1	A	A	A	.	.	.	.	.	.
M1800	Computer, Microprocessing	1	C	C	C	.	A	.	.	.	.
M1825	Printer, Computer	1	C	C	C	.	A	.	.	.	.
M4116	Monitor, Vital Signs	1	C	C	C	.	A	.	.	.	.
M4655	Stretcher, Mobile, CRS, 9 Position	1	C	C	C	.	.	.	.	.	.
M7660	Defibrillator/Monitor/Recorder, Portable	1	C	C	C	.	A	.	.	.	.
R6070	Refrigerator/Freezer, Biological,Upright, 18 Cu Ft	1	C	C	C	.	A	.	.	.	C